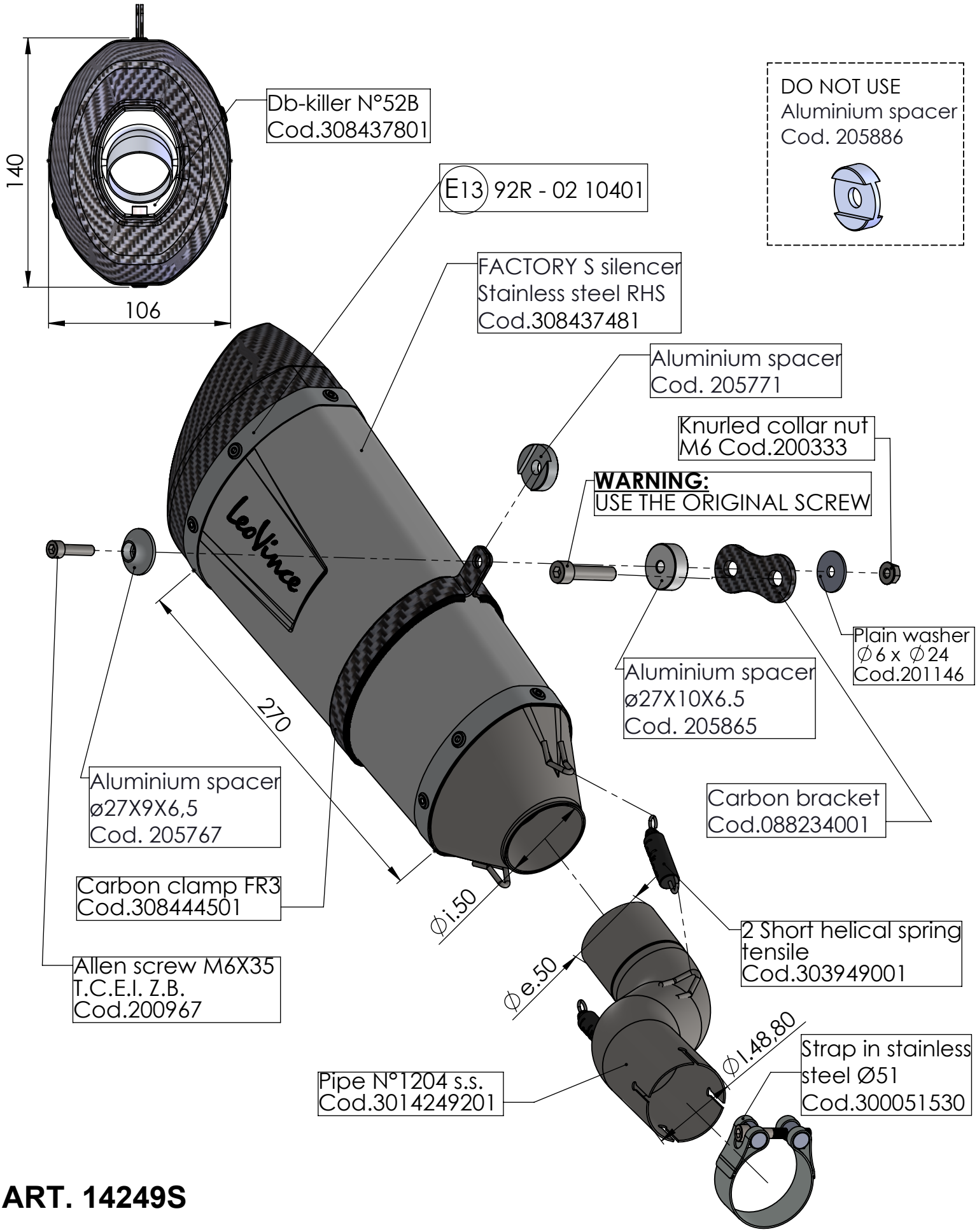

ART. 14249S

HONDA CB 1000 R Neo Sports Café

SLIP-ON - FACTORY S - STAINLESS STEEL - APPROVED